Mango-IMX6Q USB Realtek WiFi 드라이버 포팅

Revision 1.0

2020. 10. 13

CRZ Technology

http://www.crz-tech.com

http://www.mangoboard.com/

Document History

Revision	Date	Change note
1.0	2020.10.13	Initital by 전종인

목 차

1. 작업 환경

Wifi 모듈은 아래 링크에서 판매하는 제품이다.

http://www.mangoboard.com/main/view.asp?idx=762&pageNo=1&cate1=9&cate2=168&cate3=

커널은 4.9.88 버전에서 포팅한다.

2. 드라이버 포팅

2.1. Wifi 모듈 회로도

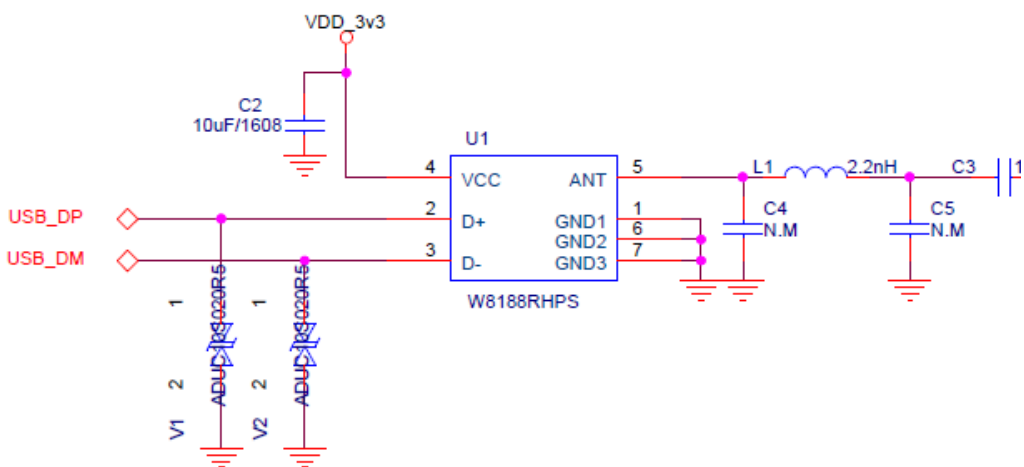

W8188RHPS 모듈을 사용한다.

2.2. Wifi 인식 확인

WiFi 모듈을 장착하고. 부팅을 하면 아래와 같이 인식을 하는지 확인이 가능하다.

root@b2qt-apalis-imx6:~# lsusb

Bus 001 Device 003: ID 0bda:8179 Realtek Semiconductor Corp. RTL8188EUS 802.11n Wireless Network Adapter

2.3. RTL8188EU 드라이버 포팅하기

드라이버 소스는 아래 링크에서 다운로드 한다.

https://github.com/quickreflex/rtl8188eus

해당 드라이버를 커널 드라이버에 포함을 한다.

```
$ git clone -b v5.2.2.4 https://github.com/quickreflex/rtl8188eus.git
$ mv rtl8188eus   linux-imx-fsl-kernel4.9.88/drivers/net/wireless/realtek/
```

수정한다.

drivers/net/wireless/realtek/Kconfig 파일 수정

```
config WLAN_VENDOR_REALTEK
        bool "Realtek devices"
        default y
        ---help---
          If you have a wireless card belonging to this class, say Y.

          Note that the answer to this question doesn't directly affect the
          kernel: saying N will just cause the configurator to skip all
          the questions about   cards. If you say Y, you will be asked for
          your specific card in the following questions.

if WLAN_VENDOR_REALTEK

source "drivers/net/wireless/realtek/rtl818x/Kconfig"
source "drivers/net/wireless/realtek/rtlwifi/Kconfig"
source "drivers/net/wireless/realtek/rtl8xxxu/Kconfig"
source "drivers/net/wireless/realtek/rtl8188eus/Kconfig"
endif # WLAN_VENDOR_REALTEK
```

drivers/net/wireless/realtek/Makefile 파일 수정

```
obj-$(CONFIG_RTL8180)          += rtl818x/
obj-$(CONFIG_RTL8187)          += rtl818x/
obj-$(CONFIG_RTLWIFI)          += rtlwifi/
obj-$(CONFIG_RTL8XXXU)         += rtl8xxxu/
obj-$(CONFIG_RTL8188EU)        += rtl8188eus/
```

커널 Configuration에서 추가한다.

CONFIG_RTL8188EU=y

드라이버 로그 없애기

drivers/net/wireless/realtek/rtl8188eus/Makefile 파일에서 1로 변경

```
CONFIG_RTW_DEBUG = y
# default log level is _DRV_INFO_ = 4,
# please refer to "How_to_set_driver_debug_log_level.doc" to set the available level.
CONFIG_RTW_LOG_LEVEL = 1
```

2.4. RTL8188EU WiFi 테스트 하기

```
root@b2qt-apalis-imx6:~# ifconfig -a
eth0      Link encap:Ethernet  HWaddr FC:C2:3D:1B:B0:19
          UP BROADCAST MULTICAST  MTU:1500  Metric:1
          RX packets:0 errors:0 dropped:0 overruns:0 frame:0
          TX packets:0 errors:0 dropped:0 overruns:0 carrier:0
          collisions:0 txqueuelen:1000
          RX bytes:0 (0.0 B)  TX bytes:0 (0.0 B)

lo        Link encap:Local Loopback
          inet addr:127.0.0.1  Mask:255.0.0.0
          inet6 addr: ::1/128 Scope:Host
          UP LOOPBACK RUNNING  MTU:65536  Metric:1
          RX packets:0 errors:0 dropped:0 overruns:0 frame:0
          TX packets:0 errors:0 dropped:0 overruns:0 carrier:0
          collisions:0 txqueuelen:1
          RX bytes:0 (0.0 B)  TX bytes:0 (0.0 B)

wlan0     Link encap:Ethernet  HWaddr 04:32:F4:1F:12:81
          BROADCAST MULTICAST  MTU:1500  Metric:1
          RX packets:0 errors:0 dropped:0 overruns:0 frame:0
          TX packets:0 errors:0 dropped:0 overruns:0 carrier:0
          collisions:0 txqueuelen:1000
          RX bytes:0 (0.0 B)  TX bytes:0 (0.0 B)
```

"wlan0" device가 인식된 것을 확인한다.

테스트 하기

```
ifconfig wlan0 up
iwlist wlan0 scanning   => 공유기 essid 있는지 검색
iwconfig wlan0 essid <name>
ex) iwconfig wlan0 essid CRZ_icanjji
udhcpc -iwlan0 => ip 할당 받기
```

IP 할당 받으면 된다.

```
# ifconfig -a

wlan0      Link encap:Ethernet   HWaddr 04:32:F4:1F:12:81
           inet addr:192.168.100.229   Bcast:192.168.100.255   Mask:255.255.255.0
           UP BROADCAST RUNNING MULTICAST   MTU:1500   Metric:1
           RX packets:48 errors:0 dropped:6 overruns:0 frame:0
           TX packets:20 errors:0 dropped:0 overruns:0 carrier:0
           collisions:0 txqueuelen:1000
           RX bytes:8859 (8.6 KiB)   TX bytes:2556 (2.4 KiB)
```

```
root@b2qt-apalis-imx6:~# ping 192.168.100.217
PING 192.168.100.217 (192.168.100.217): 56 data bytes
64 bytes from 192.168.100.217: seq=0 ttl=64 time=20.481 ms
64 bytes from 192.168.100.217: seq=1 ttl=64 time=28.103 ms
64 bytes from 192.168.100.217: seq=2 ttl=64 time=22.429 ms
64 bytes from 192.168.100.217: seq=3 ttl=64 time=18.298 ms
```

컴파일 후 zImage를 업데이트하면 아래와 같이 커널 메시지가 출력된다.

```
random: fast init done
hub 1-1:1.0: USB hub found
hub 1-1:1.0: 4 ports detected
usb 1-1.4: new high-speed USB device number 3 using ci_hdrc
RTW:
usb_endpoint_descriptor(0):
RTW: bLength=7
RTW: bDescriptorType=5
```

```
RTW: bEndpointAddress=81
RTW: wMaxPacketSize=512
RTW: bInterval=0
RTW: RT_usb_endpoint_is_bulk_in = 1
RTW:
usb_endpoint_descriptor(1):
RTW: bLength=7
RTW: bDescriptorType=5
RTW: bEndpointAddress=2
RTW: wMaxPacketSize=512
RTW: bInterval=0
RTW: RT_usb_endpoint_is_bulk_out = 2
RTW:
usb_endpoint_descriptor(2):
RTW: bLength=7
RTW: bDescriptorType=5
RTW: bEndpointAddress=3
RTW: wMaxPacketSize=512
RTW: bInterval=0
RTW: RT_usb_endpoint_is_bulk_out = 3
RTW: nr_endpoint=3, in_num=1, out_num=2

RTW: USB_SPEED_HIGH
RTW: CHIP TYPE: RTL8188E
RTW: rtw_hal_config_rftype RF_Type is 3 TotalTxPath is 1
RTW: Chip Version Info: CHIP_8188E_Normal_Chip_TSMC_D_CUT_1T1R_RomVer(0)
RTW: _ConfigNormalChipOutEP_8188E OutEpQueueSel(0x05), OutEpNumber(2)
RTW: EEPROM type is E-FUSE
RTW: Boot from EFUSE, Autoload OK !
RTW: SetHwReg: bMacPwrCtrlOn=1
bFWReady == _FALSE call reset 8051...
RTW: =====> _8051Reset88E(): 8051 reset success .
RTW: efuse_read_phymap_from_txpktbuf bcnhead:0
RTW: efuse_read_phymap_from_txpktbuf len:111, lenbak:111, aaa:111, aaabak:111
RTW: efuse_read_phymap_from_txpktbuf read count:109
RTW: HW EFUSE
RTW: 0x000: 29
```

```
81 00
6C 0B
00 00
00      00
0C 00
00 00
00 00
00
RTW: 0x010: 25
25 24
24 22
24 29
29      28
28 26
13 FF
FF FF
FF
RTW: 0x020: FF
FF FF
FF FF
FF FF
FF      FF
FF FF
FF FF
FF FF
FF
RTW: 0x030: FF
FF FF
FF FF
FF FF
FF      FF
FF FF
FF FF
FF FF
FF
RTW: 0x040: FF
FF FF
```

```
FF FF
FF FF
FF      FF
FF FF
FF FF
FF FF
FF
RTW: 0x050: FF
FF FF
FF FF
FF FF
FF      FF
FF FF
FF FF
FF FF
FF
RTW: 0x060: FF
FF FF
FF FF
FF FF
FF      FF
FF FF
FF FF
FF FF
FF
RTW: 0x070: FF
FF FF
FF FF
FF FF
FF      FF
FF FF
FF FF
FF FF
FF
RTW: 0x080: FF
FF FF
FF FF
```

```
FF FF
FF      FF
FF FF
FF FF
FF FF
FF
RTW: 0x090: FF
FF FF
FF FF
FF FF
FF      FF
FF FF
FF FF
FF FF
FF
RTW: 0x0a0: FF
FF FF
FF FF
FF FF
FF      FF
FF FF
FF FF
FF FF
FF
RTW: 0x0b0: FF
FF FF
FF FF
FF FF
FF      20
15 1C
00 00
00 00
00
RTW: 0x0c0: 00
00 00
10 00
00 00
```

```
00      00
03 FF
FF FF
FF FF
FF
RTW: 0x0d0: DA
0B 79
81 42
66 00
04      32
F4 1F
12 81
00 00
00
RTW: 0x0e0: FF
FF FF
FF FF
FF FF
FF      FF
FF FF
FF FF
FF FF
FF
RTW: 0x0f0: FF
FF FF
FF FF
FF FF
FF      FF
FF FF
FF FF
FF FF
FF
RTW: 0x100: FF
FF FF
FF FF
FF FF
FF      FF
```

```
FF FF
FF FF
FF FF
FF
RTW: 0x110: FF
FF FF
FF FF
FF FF
FF      FF
FF FF
FF FF
FF FF
FF
RTW: 0x120: FF
FF FF
FF FF
FF FF
FF      FF
FF FF
FF FF
FF FF
FF
RTW: 0x130: FF
FF FF
FF FF
FF FF
FF      FF
FF FF
FF FF
FF FF
FF
RTW: 0x140: FF
FF FF
FF FF
FF FF
FF      FF
FF FF
```

```
FF FF
FF FF
FF
RTW: 0x150: FF
FF FF
FF FF
FF FF
FF      FF
FF FF
FF FF
FF FF
FF
RTW: 0x160: FF
FF FF
FF FF
FF FF
FF      FF
FF FF
FF FF
FF FF
FF
RTW: 0x170: FF
FF FF
FF FF
FF FF
FF      FF
FF FF
FF FF
FF FF
FF
RTW: 0x180: FF
FF FF
FF FF
FF FF
FF      FF
FF FF
FF FF
```

```
FF FF
FF
RTW: 0x190: FF
FF FF
FF FF
FF FF
FF      FF
FF FF
FF FF
FF FF
FF
RTW: 0x1a0: FF
FF FF
FF FF
FF FF
FF      FF
FF FF
FF FF
FF FF
FF
RTW: 0x1b0: FF
FF FF
FF FF
FF FF
FF      FF
FF FF
FF FF
FF FF
FF
RTW: 0x1c0: FF
FF FF
FF FF
FF FF
FF      FF
FF FF
FF FF
FF FF
```

```
FF
RTW: 0x1d0: FF
FF FF
FF FF
FF FF
FF      FF
FF FF
FF FF
FF FF
FF
RTW: 0x1e0: FF
FF FF
FF FF
FF FF
FF      FF
FF FF
FF FF
FF FF
FF
RTW: 0x1f0: FF
FF FF
FF FF
FF FF
FF      FF
FF FF
FF FF
FF FF
FF

RTW: EEPROM ID=0x8129
RTW: VID = 0x0BDA, PID = 0x8179
RTW: Customer ID: 0x00, SubCustomer ID: 0xCD
RTW:                                    Hal_ReadPowerSavingMode88E...bHWPwrPindetect(0)-
bHWPowerdown(0) ,bSupportRemoteWakeup(1)
RTW: ### PS params=>   power_mgnt(2),usbss_enable(0) ###
RTW: EEPROMRegulatory = 0x0
RTW: hal_com_config_channel_plan chplan:0x20
```

```
RTW: crystal_cap: 0x15
RTW: EEPROM Customer ID: 0x 0
RTW: EEPROM : AntDivCfg = 0, TRxAntDivType = 3
RTW: Board Type: 0x 0
RTW: ThermalMeter = 0x1c
RTW: pHalData->ExternalPA_2G = 0 , pHalData->ExternalLNA_2G = 0
RTW: pHalData->TypeGLNA is 0x0
RTW: pHalData->rfe_type is 0xff
RTW: rtw_hal_read_chip_info in 350 ms
RTW: init_channel_set((null)) ChannelPlan ID:0x20, ch num:13
RTW: NR_RECVBUFF: 8
RTW: MAX_RECVBUF_SZ: 15360
RTW: NR_PREALLOC_RECV_SKB: 8
RTW: Enable CONFIG_FIX_NR_BULKIN_BUFFER
RTW: rtw_alloc_macid((null)) if1, hwaddr:ff:ff:ff:ff:ff:ff macid:1
RTW: rtw_regsty_chk_target_tx_power_valid return _FALSE for band:0, path:0, rs:0, t:-1
RTW: pwrctrlpriv.bSupportRemoteWakeup~~~~~~~
RTW: pwrctrlpriv.bSupportRemoteWakeup~~~[1]~~~
```